EchoPanel® Empire

Designer: Woven Image

Application(s): Walls, Partitions

Composition & Pattern

Composition	100% PET (80% post-consumer recycled)
Colours Available	37
Pattern Type	Precision Cut

Dimensions & Weight

Dimensions	Length: 2750mm (+/-2 mm), Width: 1100mm (+/- 2mm), Thickness: 12mm (+/- 7%). Also available in 24mm (+/-7%), specifications will differ.
Unit of Sale	Panel
Unit of Sale Net Weight (kg)	8

Performance

Fire Test Result	AS 1530.3, BS EN 13501.1: Classification B - s1, d0, ISO 9705: Group 1, ASTM E84 Unadhered: Class 1 or A, BS EN 45545-2 + A1 Annex C: CIT: 0.05, GB 8624 B1
Acoustic Performance Standard Test Method	AS ISO 354: 2006 (R2016), AS ISO 11654: 2002 (2016), ASTM C423 - 17

Copyright Woven Image

Noise Reduction Coefficient (NRC) Result	Direct fix: 0.45
Sound Absorption Average (SAA) Result	Direct fix: 0.43
Weighted Sound Absorption Coefficient (αw) Result	Direct fix: 0.30 (MH)
Sound Absorption Class	D (Direct fix)
Additional Acoustic Information	Noise reduction coefficient result key: H = High Frequency / MH = Mid to High Frequency
Colour Fastness to Light Standard Test Method	ISO 105 B02
Colour Fastness Light Rating	6 - 7
Light Reflectance Standard Test Method	ASTM E1477-98A-2017
Light Reflectance Value	Luminous Reflectance Factors (see Tables 2.0 & 3.0 below for all tested colours)

Sustainability

VOC Emissions Results	ASTM D5116 - 2017: TVOC Emissions Rate: 0.033mg/m^2/hr (24hrs); Formaldehyde Emissions Rate: 0.07mg/m^2/hr. CDPH Standard Method v1.2 – 2017 (CA 01350): TVOC Emissions Rate: 0.013mg/m^3; Formaldehyde Emissions Rate: <1µg/m^3
Sustainability Performance	

Copyright Woven Image

Instructions

Additional Information

See Woven Image EchoPanel® Care & Cleaning Guide.
See Woven Image EchoPanel® Precision Cut Panels Installation Guide.

Exact colour matching cannot be guaranteed between batches. Fibre mix and web variation are natural characteristics of this product.

Copyright Woven Image

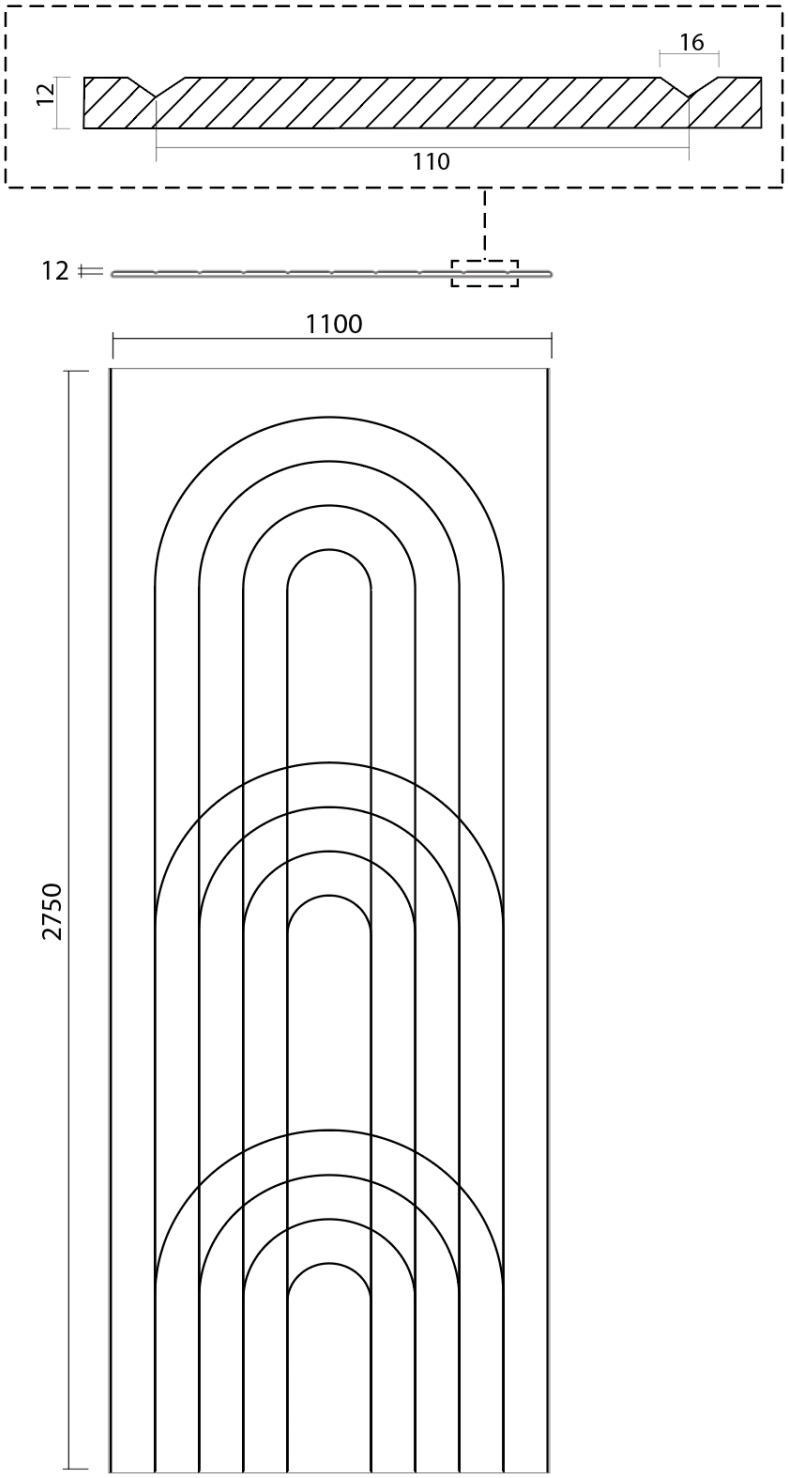

Copyright Woven Image

TABLE 2.0

LUMINOUS REFLECTANCE (ASTM E1477-98A: 2017) ECHOPANEL® 12mm

COLOUR CODE	COLOUR NAME	LUMINOUS REFLECTANCE FACTOR
542	CHARCOAL	5.36
365	NAVY	8.04
193	ROUGE	10.94
447	SLATE	11.88
484	CAYENNE	13.75
167	CINNAMON	14.44
349	VINEYARD	16.76
384	OLIVE	17.60
660	CORONET	19.07
295	MANDARIN	20.07
444	SMOKE	20.09
338	JADE	20.52
402	PEBBLE	21.25
721	NUTMEG	26.62
442	GREY	30.40
580	SAGE	32.77
579	PISTACHIO	33.98
551	DUCK EGG	35.67
124	OCHRE	36.09
274	ORCHID	38.14
487	BLUSH	40.06
495	DUSK	41.16
468	VANILLA	42.59
101	FROST	45.64
454	MUSHROOM	52.03
573	MINT	54.87
908	CREAM	62.07
106	BUTTER	69.31
381	LIME SPLICE	69.31
500	OFF WHITE	80.44

Copyright Woven Image

TABLE 3.0

LUMINOUS REFLECTANCE (ASTM E1477-98A: 2017) ECHOPANEL® 24mm

COLOUR CODE	COLOUR NAME	LUMINOUS REFLECTANCE FACTOR
550	ONYX	2.76
330	IVY	7.30
269	WINE	7.34
633	PACIFIC	20.38

Copyright Woven Image